SPECIFICATION APPLIED

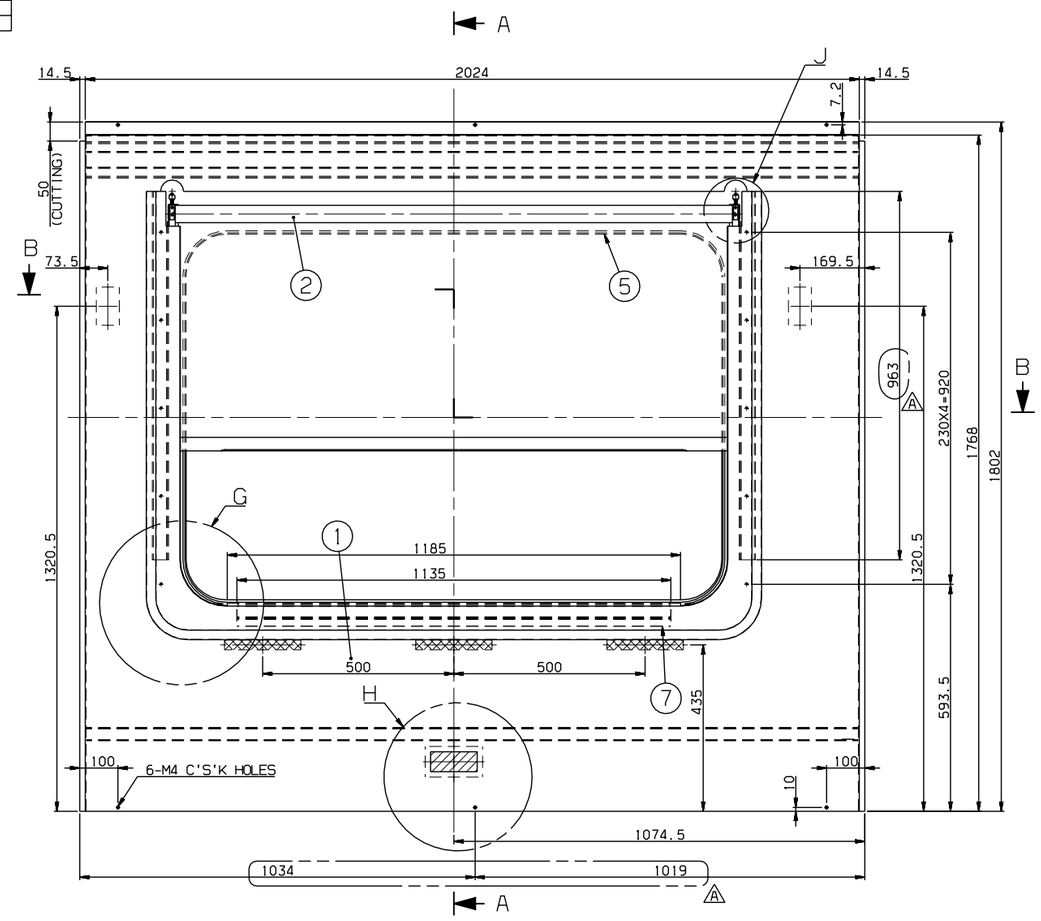

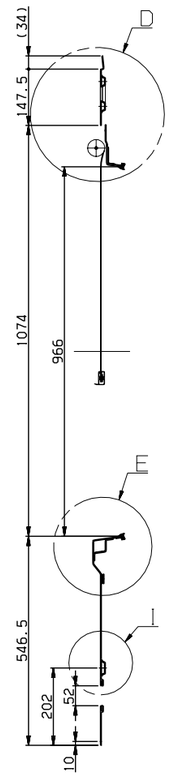

SECTION A-A

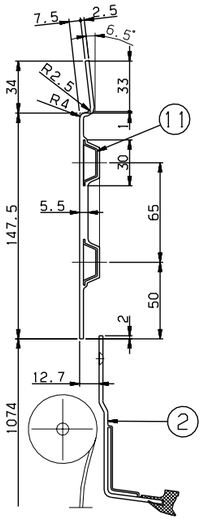

DETAIL D
SCALE=1/2

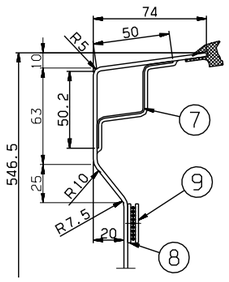

DETAIL E
SCALE=1/2

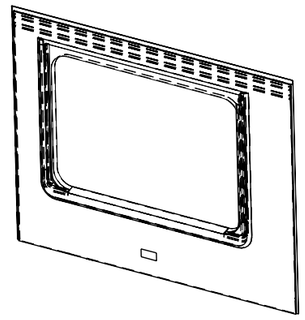

ISO VIEW

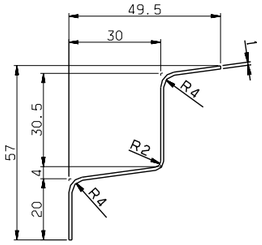

DETAIL #7
SCALE=1/1

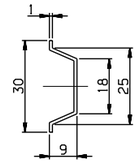

DETAIL #11
SCALE=1/1

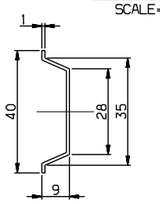

DETAIL #10
SCALE=1/1

NOTE

1. AN INTERIOR PANEL'S COLOR(RAL 7047) AND SURFACE SHALL BE MANUFACTURED AFTER SAMPLE'S APPROVAL BY CUSTOMER
2. PART 5 SHALL BE CUT ADEQUATELY AND USED
3. PART 7 IS TO PROTECT.(TO CUT ADEQUATELY)
4. PART 2 SHALL BE WELL OPERATED UNDER CONDITION OF ASSEMBLY
5. PART 8 SHALL BE FIXED ON THE PART 1, AND PART 9 SHALL BE DELIVERED SEPERATETLY
6. THE INTERFACE BETWEEN PART 1 AND PART 2 SHALL BE STRONGLY SEALED

△A 7. PART 4 SHOULD BE APPLIED WITH PART 13.

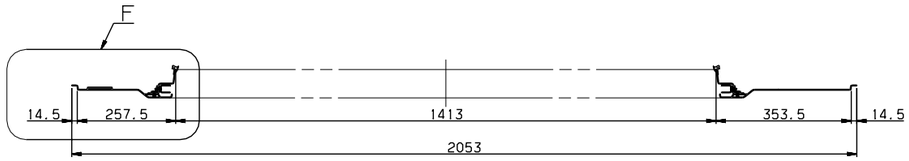

SECTION B-B

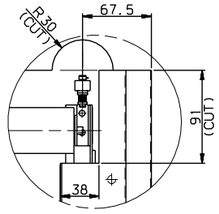

DETAIL J
SCALE=1/3

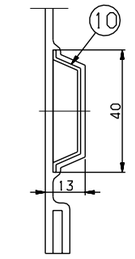

DETAIL I
SCALE=1/1

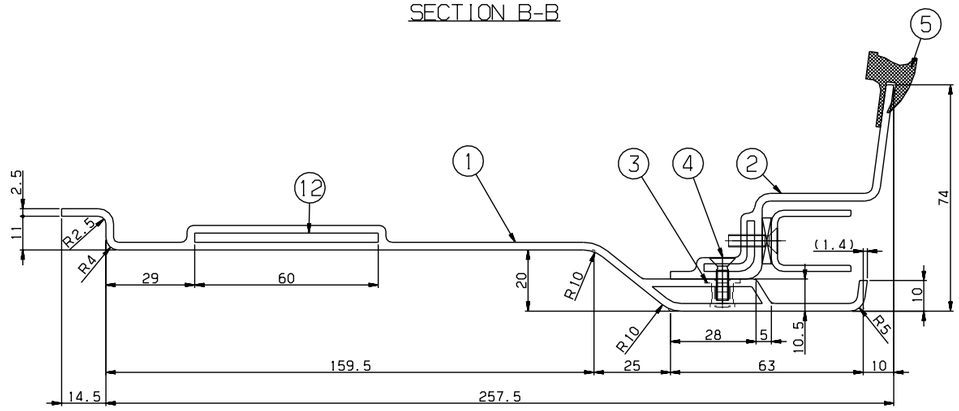

DETAIL F
SCALE=1/1

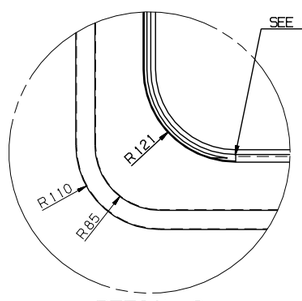

DETAIL G
SCALE=1/4

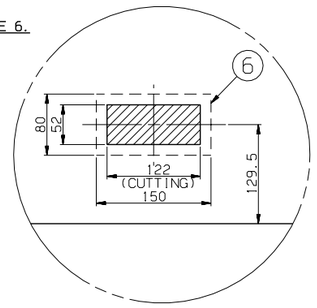

DETAIL H
SCALE=1/4

13	CP910004-406	ADHESIVE	ASSY	1		LOCTITE 242
12	RFP51113EJ0-012	SEAT.TAP	SUS304	2		PL T3x100x60
11	RFP51113EJ0-011	STIFFENER	A1050P	2		T1
10	RFP51113EJ0-010	STIFFENER	A1050P	1		T1
9	RFP51113EJ0-009	DUAL_LOCK,FASTENER	ASSY	3		3M,SJ-3550 L=200(DUAL TAPE)
8	RFP51113EJ0-008	DUAL_LOCK,FASTENER	ASSY	3		3M,SJ-3551 L=200(DUAL TAPE)
7	RFP51113EJ0-007	STIFFENER	SUS304	1		T1,L=1135
6	RFP51113EJ0-006	SEAT.TAP	SUS304	1		PL T3x150x80
5	RFP51113EJ0-005	RUBBER,SECTION	ASSY	1		RFP51011ANO,L=4600
4	RS60607-098S	SCREW,F.H	SUS304	10		M4x14
3	RFP51113EJ0-003	NUTSERT	SUS304	10		M4
2	RFP51009ANO	PANEL,BLIND WINDOW	ASSY	1		
1	RFP51113EJ0-001	PANEL	FRP	1		T2.5

품번 NO.	부품 번호 PART NO.	품명 DESCRIPTION	재질 MATERIAL	수량 Q'TY	공용 V.T	비고 REMARKS

승인 APP	JeongYul Lee 2014.10.14	재질 MAT'L	ASSY
검도 CHK	KeongBong Park 2014.10.14	표면처리 SURFACE TREATMENT	G.W
설계 DGN	HeonUk Lee 2014.10.14	일반공차 GENERAL TOLERANCE	
제도 DRG	HeeSook Jeong 2014.10.14	적용된 REF. NO.	

TITLE: WINDOW,MASK,TYPE I

도면 번호 DRG. NO: RFP51113EJ0 MS | Ver. 00 Rev. -A | RSD1402

일반공차	MC	VD	CT
	B	B	B

SCALE 1/8 | 매수 SHEET 1 of 1 | SIZE A1

RFP-

기호 MARK	일자 DATE	내용 DETAIL OF REVISION(E.C ZONE)	설변번호 E.C NO.	설계 DGN	검도 CHK	승인 APP
Ax4	2014.12.18	ADDED PART NO.#13 & DIMENSION	RSD1402-U071	H.U.LEE	K.B.PARK	J.Y.LEE

HYUNDAI Rotem 현대로템주식회사

본 도면은 당사 재산권에 해당하며 무단복사/배포 금지됨. PROPERTY OF ISSUING ENTITY, CANNOT BE DISTRIBUTED OR REPRODUCED WITHOUT AUTHORIZATION.

CATIA

일반공차 GENERAL TOLERANCE				
절삭 MACHINING	~ 40	2	4
	~ 30	2	3
	~ 10	1	1.5
	< 3	0.5	1
주조 CASTING	~3150	-	7
	~1600	4	5
	~ 800	3	4
	~ 400	2	3
	~ 200	1.5	2
	~ 100	1	1.5
등급 GRADE		A	B
용접 구조물 WELDING			
주조 CASTING	~ 20M	8	14
	~ 15M	7	12
	~ 12M	6	10
	~ 9M	5	8
	~ 4M	4	6
	~ 2M	3	4
	~ 1M	2	3
	~ 315	1	2
	~ 120	1	2
	~ 30	1	1
등급 GRADE		A	B
용접 구조물 WELDING			
주조 CASTING	~ 20M	-	6.0
	~ 15M	-	5.0
	~ 12M	-	4.0
	~ 9M	-	3.0
	~ 4M	0.8	2.0
	~ 2M	0.5	1.2
	~ 1M	0.3	0.8
	~ 315	0.2	0.5
	~ 120	0.15	0.3
	~ 30	0.1	0.2
	3 ~ 6	0.05	0.1
등급 GRADE		A	B
가공 MACHINING			

	~ 40	2	4
	~ 30	2	3
	~ 10	1	1.5
	< 3	0.5	1
	~3150	-	7
	~1600	4	5
	~ 800	3	4
	~ 400	2	3
	~ 200	1.5	2
	~ 100	1	1.5
		A	B
	~ 20M	8	14
	~ 15M	7	12
	~ 12M	6	10
	~ 9M	5	8
	~ 4M	4	6
	~ 2M	3	4
	~ 1M	2	3
	~ 315	1	2
	~ 120	1	2
	~ 30	1	1
		A	B
	~ 20M	-	6.0
	~ 15M	-	5.0
	~ 12M	-	4.0
	~ 9M	-	3.0
	~ 4M	0.8	2.0
	~ 2M	0.5	1.2
	~ 1M	0.3	0.8
	~ 315	0.2	0.5
	~ 120	0.15	0.3
	~ 30	0.1	0.2
	3 ~ 6	0.05	0.1
		A	B